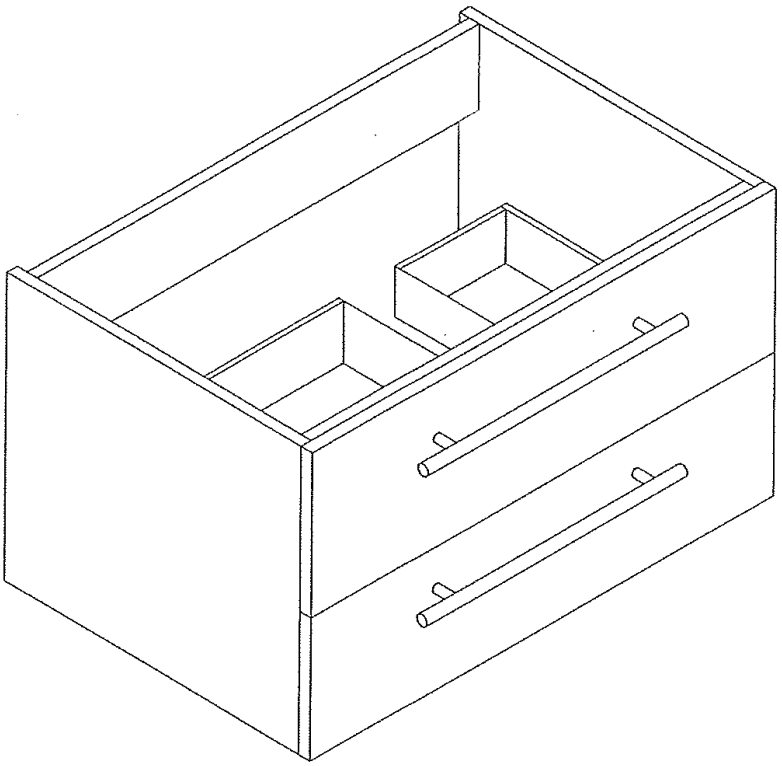

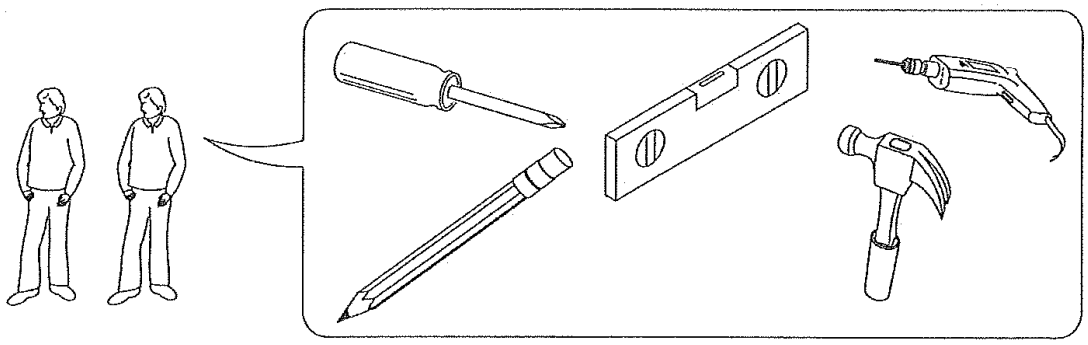

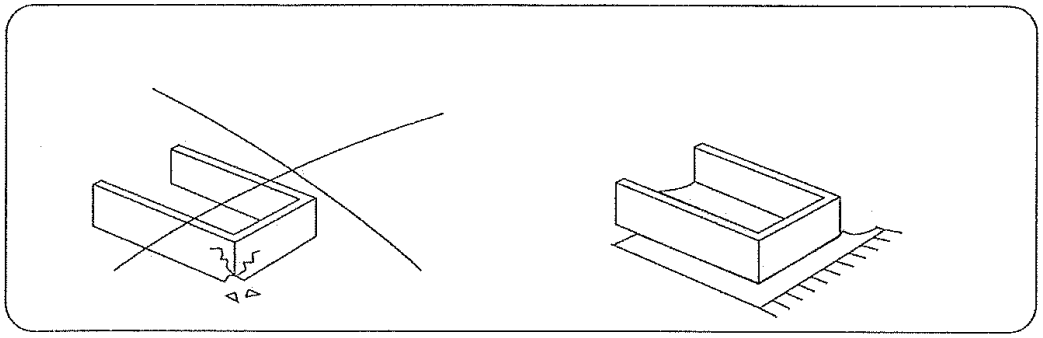

A B C D E K

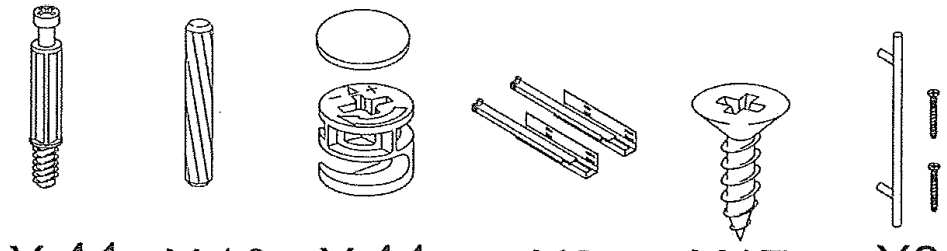

X 41 X 18 X 41 X2 X17 X2

F H J

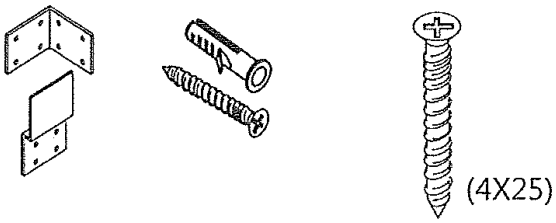

X2 X8 X4

1

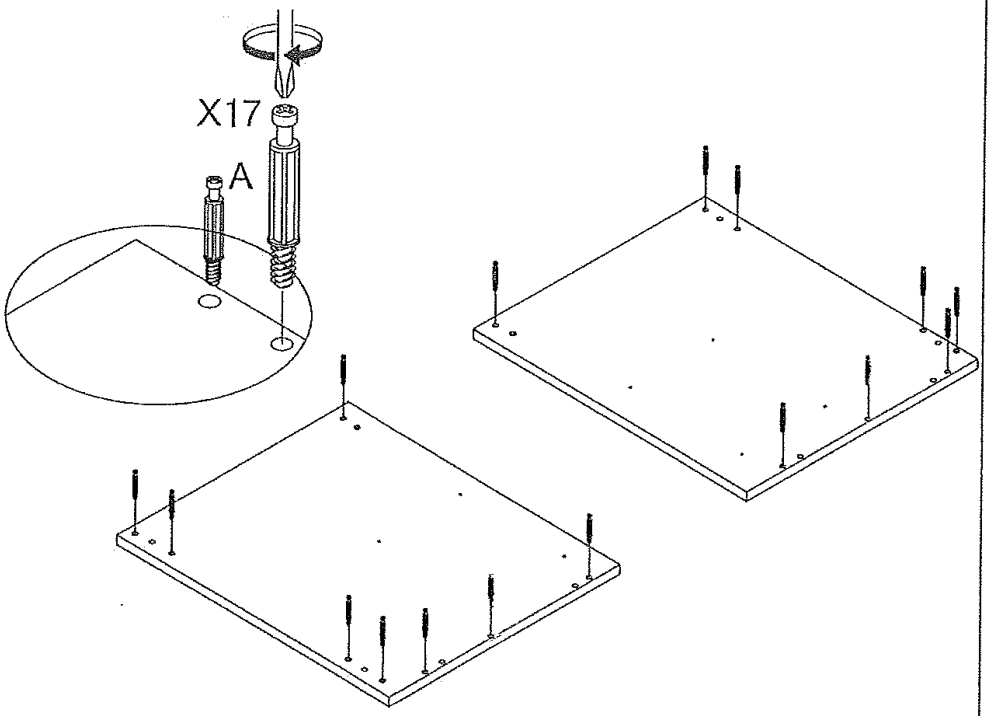

2

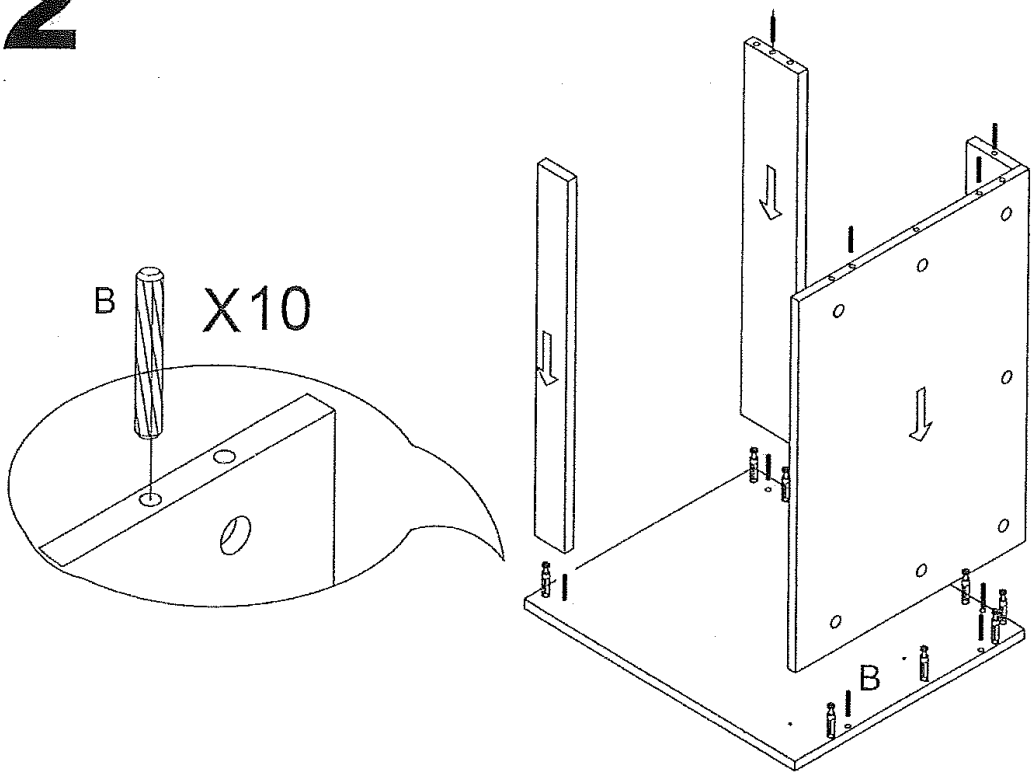

3

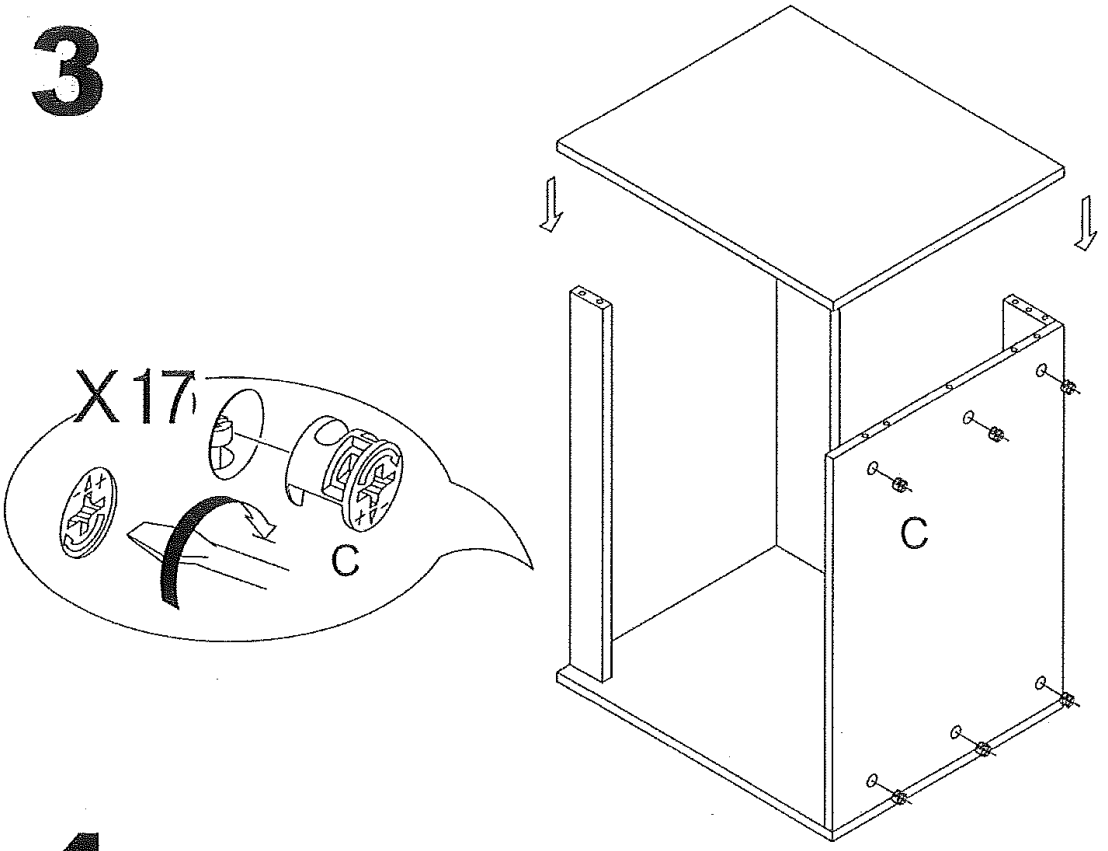

4

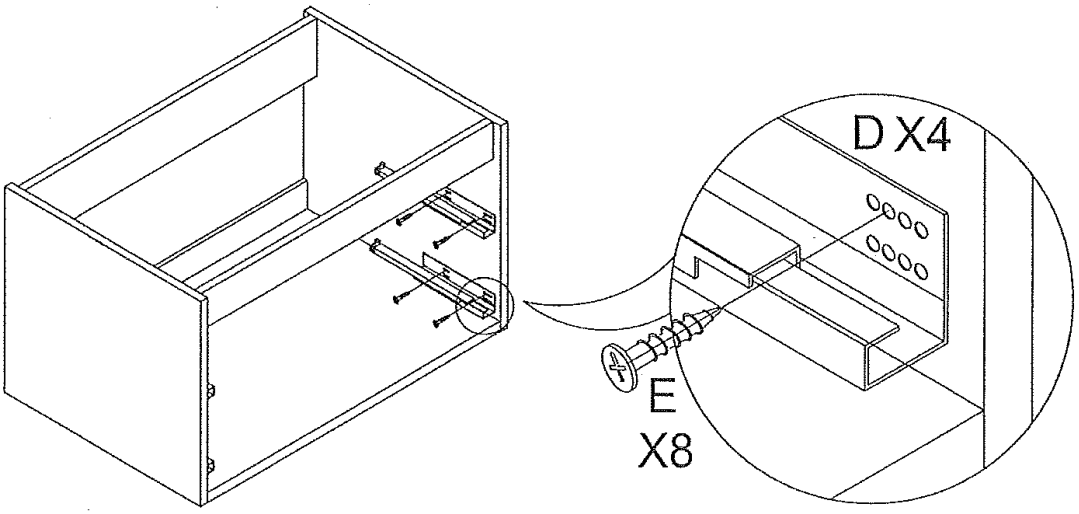

6

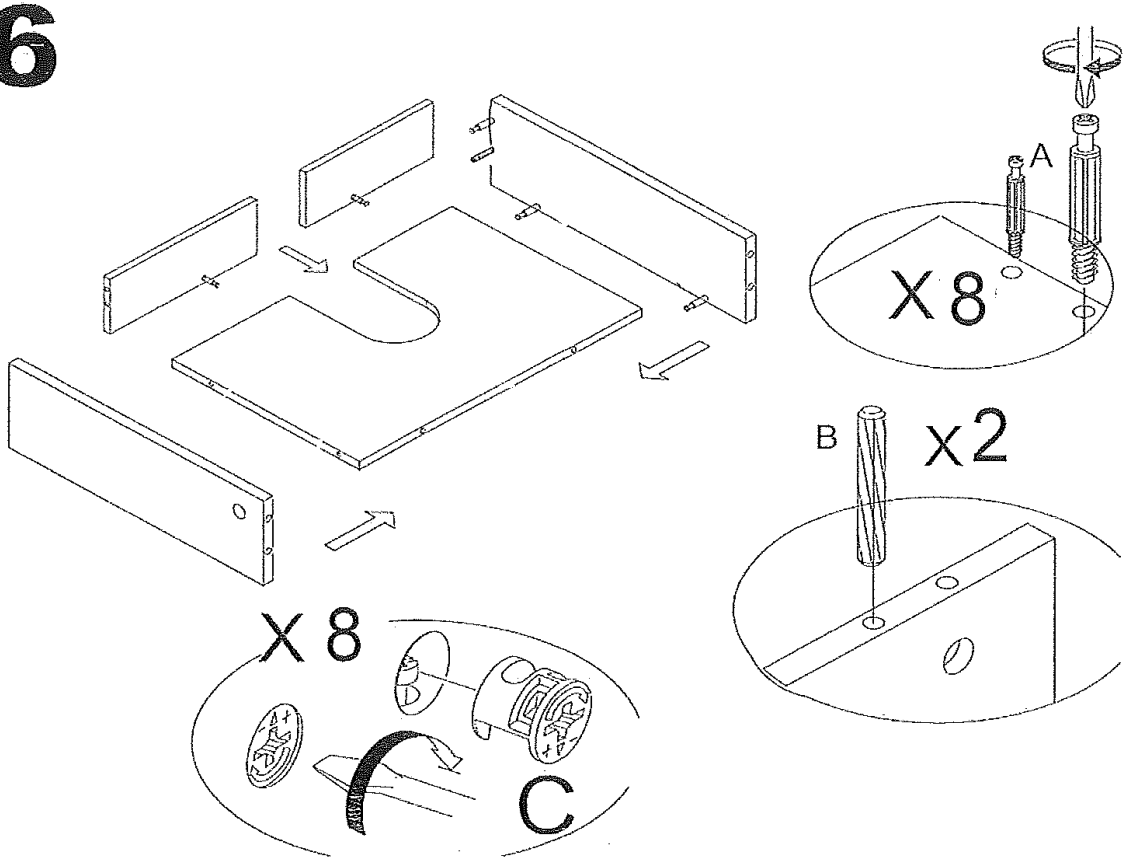

7

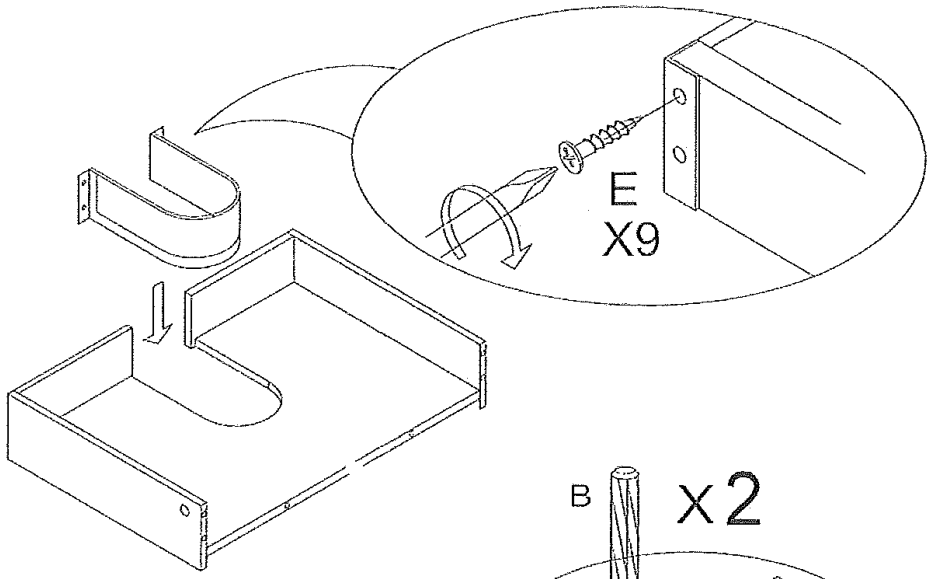

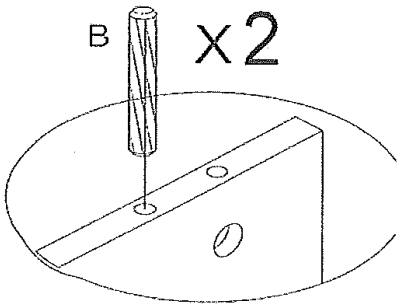

8

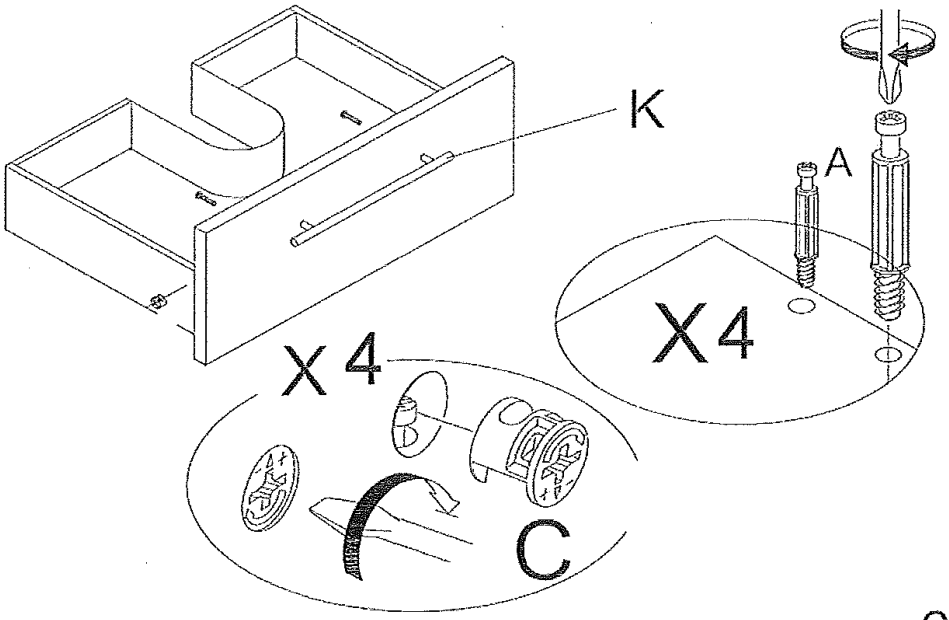

9

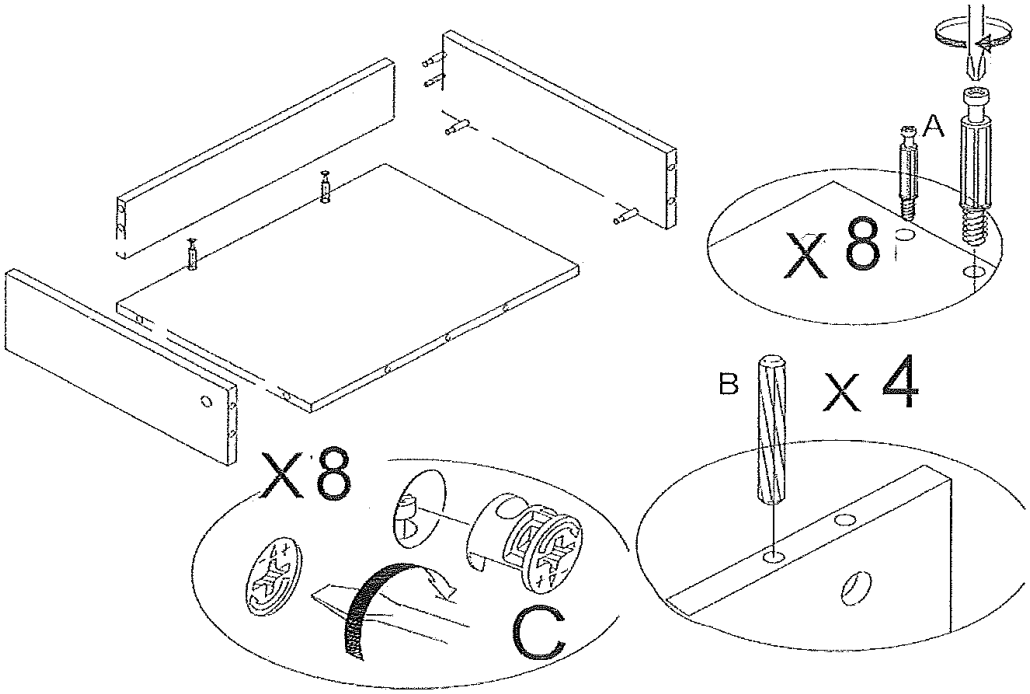

10

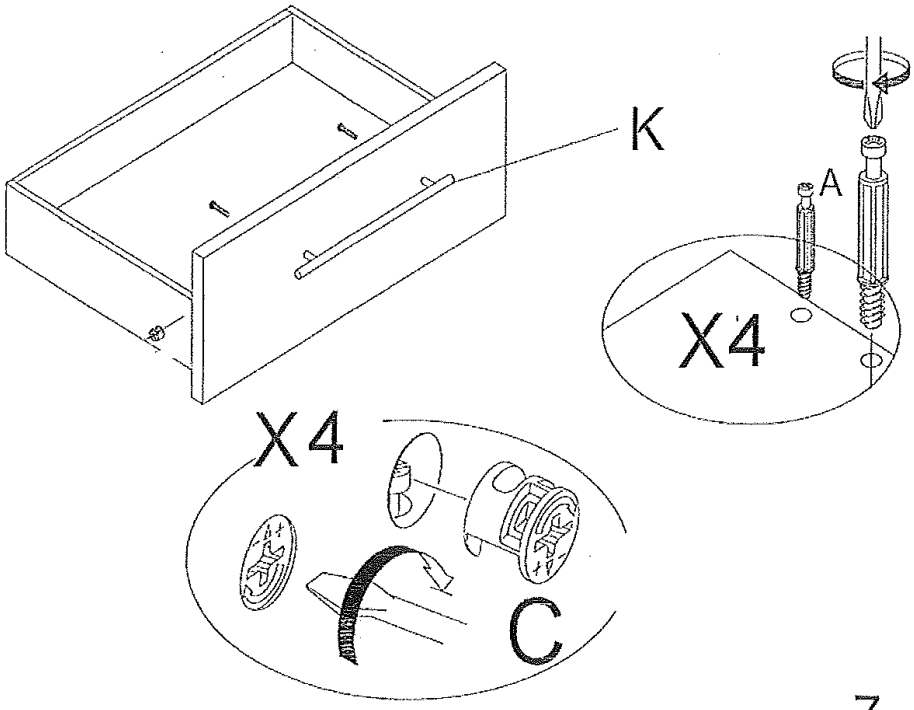

11

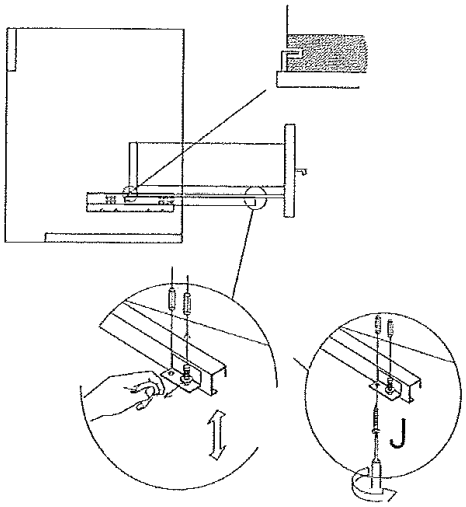

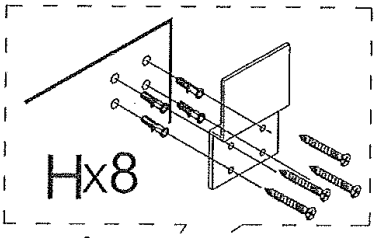

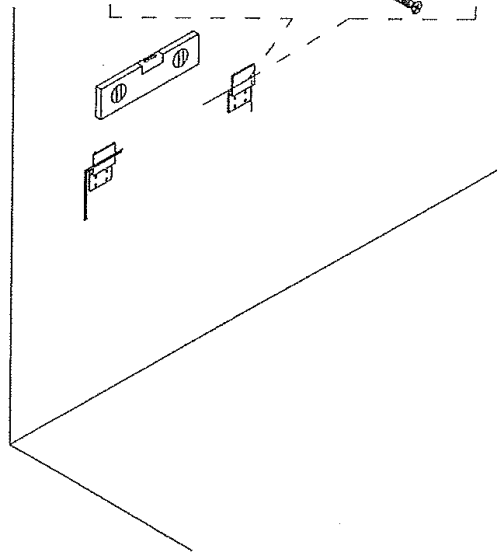
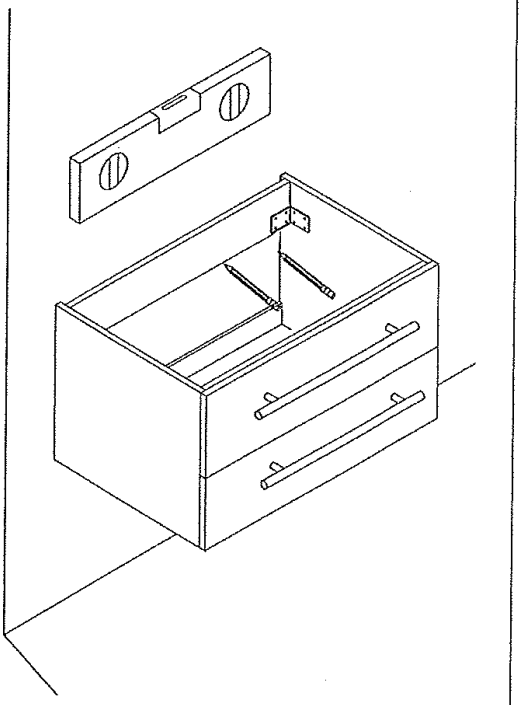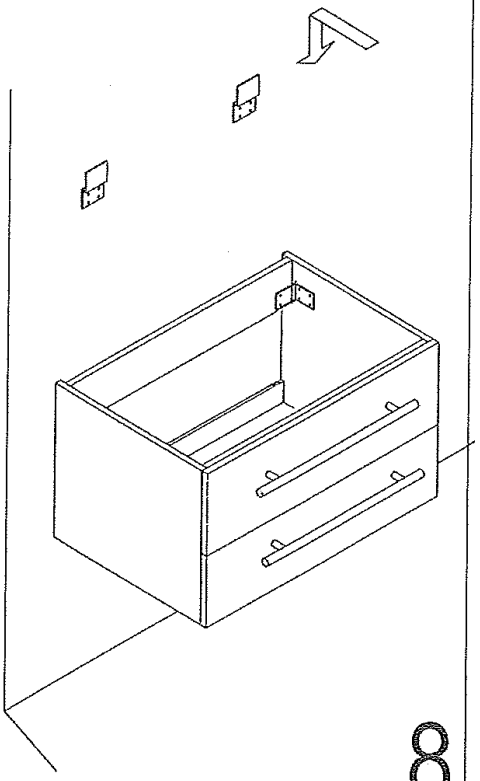
12